CONVEYING

REMAGRIP- DRUM LAGGING	B-1 to B-13
REMASLEEVE- BELT IDLER SLEEVES	B-14 to B-19
REMASKIRT- SKIRT RUBBER	B-20 to B-22
REMASLIDE- LOW FRICTION IMPACT BARS	B-23
REMACLEAN- BELT CLEANING	B-24 to B-43

REMAGRIP 50

FIELDS OF APPLICATION
- Grooved rubber cover for drive pulleys
- Cover for pulleys in order to avoid material build–up with positive influence on belt tracking
- Reduced slippage between belt and pulley through increased coefficient of sliding friction
- Evacuation of moisture and dirt
- Protects the pulleys from wear and corrosion
- Pulley lagging for low to medium loaded fabric belts
- Short belt conveyors with small pulley diameter up to 800mm

REMAGRIP 50/CN

Technical characteristics

Polymer	NR	DIN ISO 1629
Specific weight	1,08 g/cm³	DIN 53479
Hardness	50 ± 5 Shore A	DIN 53505
Abrasion	130 mm³	DIN 53516
Resilience	65 %	DIN 53512
Standard roll length	10 m	
Profile	18 x 6 x 3 mm	(Profile 20)
Colour	orange	

Ref. No.	Dimensions mm	kg/m²
549 4501	8 x 1 200	8,56
549 4518	8 x 1 400	8,56
549 4525	8 x 1 500	8,56
549 4532	8 x 1 600	8,56
549 4549	8 x 2 000	8,56
549 4563	10 x 1 200	10,60
549 4570	10 x 1 400	10,60
549 4587	10 x 1 500	10,60
549 4594	10 x 1 600	10,60
549 4604	10 x 2 000	10,60
549 4628	12 x 1 200	12,72
549 4635	12 x 1 400	12,72
549 4642	12 x 1 500	12,72
549 4659	12 x 1 600	12,72
549 4666	12 x 2 000	12,72

REMAGRIP 60

FIELDS OF APPLICATION
- Grooved rubber cover for drive pulleys
- Cover for pulleys in order to avoid material build–up with positive influence on belt tracking
- Reduced slippage between belt and pulley through increased coefficient of sliding friction
- Evacuation of moisture and dirt
- Protects the pulleys from wear and corrosion
- Pulley lagging for low to medium loaded fabric belts
- Short belt conveyors with small pulley diameter up to 800mm

REMAGRIP 60/CN

Technical characteristics

Polymer	BR/IR/SBR	DIN ISO 1629
Specific weight	1,13 g/cm³	DIN 53479
Hardness	60 ± 5 Shore A	DIN 53505
Abrasion	120 mm³	DIN 53516
Resilience	45 %	DIN 53512
Standard roll length	10 m	
Profile	18 x 6 x 3 mm	(Profile 20)
Colour	black	

Ref. No.	Dimensions mm	kg/m²
549 4714	8 x 1 200	8,96
549 4721	8 x 1 400	8,96
549 4738	8 x 1 500	8,96
549 4745	8 x 1 600	8,96
549 4752	8 x 2 000	8,96
549 4776	10 x 1 200	11,20
549 4783	10 x 1 400	11,20
549 4790	10 x 1 500	11,20
549 4800	10 x 1 600	11,20
549 4817	10 x 2 000	11,20
549 4831	12 x 1 200	13,44
549 4848	12 x 1 400	13,44
549 4855	12 x 1 500	13,44
549 4862	12 x 1 600	13,44
549 4879	12 x 2 000	13,44
549 4903	15 x 2 000	17,10

REMAGRIP 60 V/CN
Self-extinguishing and anti-static

Technical characteristics

Polymer	CR	DIN ISO 1629
Specific weight	1,42 g/cm³	DIN 53479
Hardness	63 ± 5 Shore A	DIN 53505
Abrasion	145 mm³	DIN 53516
Resilience	23 %	DIN 53512
Standard roll length	10 m	
Profile	18 x 6 x 3 mm	(Profile 20)
Anti-static	EN 20284	(DIN 22104)
Self-extinguishing	LOBA NW No. 18.43.21-89-33	
Colour	black	

Ref. No.	Dimensions mm	kg/m²
549 4910	8 x 1 200	10,56
549 4927	8 x 1 400	10,56
549 4958	8 x 2 000	10,56
549 4972	10 x 1 200	13,20
549 4989	10 x 1 400	13,20
549 5012	10 x 2 000	13,20
549 5036	12 x 1 200	15,84
549 5043	12 x 1 400	15,84
549 5074	12 x 2 000	15,84

REMAGRIP 60 OIL/CN
Oil and grease resistant

Technical characteristics

Polymer:	NBR	DIN ISO 1629
Specific weight	1,16 g/cm³	DIN 53479
Hardness	65 ± 5 Shore A	DIN 53505
Abrasion	125 mm³	DIN 53516
Resilience	40 %	DIN 53512
Standard roll length	10 m	
Profile	18 x 6 x 3 mm	(Profile 20)
Colour	black	

Ref. No.	Dimensions mm	kg/m²
549 5115	8 x 2 000	8,96
549 5139	10 x 2 000	11,20
549 5153	12 x 2 000	13,44

REMAGRIP 60 S/CN

Flame resistant and anti-static (FRAS)

Technical characteristics

Polymer	SBR/BR	DIN ISO 1629
Specific weight	1,25 g/cm³	DIN 53479
Hardness	65 ± 5 Shore A	DIN 53505
Abrasion	125 mm³	DIN 53516
Resilience	40 %	DIN 53512
Standard roll length	10 m	
Profile	18 x 6 x 3 mm	(Profile 20)
Flame resistant	EN 20340	(DIN 22103)
Anti-static	EN 20284	(DIN 22104)
Colour	black	

Ref. No.	Dimensions mm	kg/m²
549 5201	8 x 2 000	9,68
549 5225	10 x 2 000	12,10
549 5256	12 x 2 000	14,52

REMAGRIP 60 HR/CN

Heat resistant

Technical characteristics

Polymer	IR/BR	DIN ISO 1629
Specific weight	1,09 g/cm³	DIN 53479
Hardness	60 ± 5 Shore A	DIN 53505
Abrasion	55 mm³	DIN 53516
Resilience	50 %	DIN 53512
Standard roll length	10 m	
Profile	18 x 6 x 3 mm	(Profile 20)

Resistant to a permanent max. temperature of 80 °C (176 °F) and short peaks up to 100 °C (212 °F)

Colour	black

Ref. No.	Dimensions mm	kg/m²
549 5304	8 x 2 000	8,64
549 5328	10 x 2 000	10,80
549 5359	12 x 2 000	12,96

REMAGRIP 60 WHITE, FOOD/CN
Food quality

Technical characteristics

Polymer	NR/BR	DIN ISO 1629
Specific weight	1,19 g/cm³	DIN 53479
Hardness	63 ± 5 Shore A	DIN 53505
Abrasion	160 mm³	DIN 53516
Resilience	55 %	DIN 53512
Standard roll length	10 m	
Profile	18 x 6 x 3 mm	(Profile 20)
Food contact	Admissible according to Category 4, BGVV, 167. Notice, paragraph XXI	
Colour	white	

Ref. No.	Dimensions mm	kg/m²
549 5407	8 x 2 000	9,44
549 5421	10 x 2 000	11,80
549 5452	12 x 2 000	14,16

REMAGRIP 60 WHITE, OIL, FOOD/CN
Food quality, oil and grease resistant

Technical characteristics

Polymer	NBR	DIN ISO 1629
Specific weight	1,27 g/cm³	DIN 53479
Hardness	65 ± 5 Shore A	DIN 53505
Abrasion	170 mm³	DIN 53516
Resilience	25 %	DIN 53512
Standard roll length	10 m	
Profile	18 x 6 x 3 mm	(Profile 20)
Food contact	Admissible according to Category 4, BGVV, 167. Notice, paragraph XXI	
Colour	white	

Ref. No.	Dimensions mm	kg/m²
549 5469	8 x 2 000	9,44
549 5476	10 x 2 000	11,60
549 5483	12 x 2 000	13,92

REMAGRIP 150-FDA WHITE, OIL, FOOD/CN
Food quality, oil and grease resistant

Technical characteristics

Polymer	NBR	DIN ISO 1629
Specific weight	1,23 g/cm³	DIN 53479
Hardness	57 ± 5 Shore A	DIN 53505
Abrasion	160 mm³	DIN 53516
Resilience	27 %	DIN 53512
Standard roll length	10 m	
Profile	18 x 6 x 3 mm	(Profile 20)
Food contact	Admissible according to FDA regulation No. 21 §177.2600 Admissible according to Category 4, BGVV, 167. Notice, paragraph XXI	
Colour	white	

Ref. No.	Dimensions mm	kg/m²
549 0251	8 x 2 000	8,72
549 0268	10 x 2 000	11,20

REMAGRIP 65

FIELDS OF APPLICATION
- For fabric belts and low to medium tension steelcord belts
- Grooved rubber cover for drive pulleys
- Cover for pulleys in order to avoid material build–up with positive influence on belt tracking
- Reduced slippage between belt and pulley through increased coefficient of sliding friction
- Evacuation of moisture and dirt
- Protects the pulleys from wear and corrosion

REMAGRIP 65/CN

Technical characteristics

Polymer	BR/IR/SBR	DIN ISO 1629
Specific weight	1,13 g/cm³	DIN 53479
Hardness	60 ± 5 Shore A	DIN 53505
Abrasion	120 mm³	DIN 53516
Resilience	45 %	DIN 53512
Standard roll length	10 m	
Profile	50 x 6 x 3 mm	(Profil 50)
Colour	black	

Ref. No.	Dimensions mm	kg/m²
549 5500	8 x 1 200	9,60
549 5517	8 x 1 400	9,60
549 5524	8 x 1 500	9,60
549 5531	8 x 1 600	9,60
549 5548	8 x 2 000	9,60
549 5555	10 x 1 200	11,80
549 5562	10 x 1 400	11,80
549 5579	10 x 1 500	11,80
549 5586	10 x 1 600	11,80
549 5593	10 x 2 000	11,80
549 5603	12 x 1 200	14,40
549 5610	12 x 1 400	14,40
549 5627	12 x 1 500	14,40
549 5634	12 x 1 600	14,40
549 5641	12 x 2 000	14,40

REMAGRIP 65 V/CN

Self-extinguishing and anti-static

Technical characteristics

Polymer	CR	DIN ISO 1629
Specific weight	1,42 g/cm³	DIN 53479
Hardness	63 ± 5 Shore A	DIN 53505
Abrasion	145 mm³	DIN 53516
Resilience	23 %	DIN 53512
Standard roll length	10 m	
Profile	50 x 6 x 3 mm	(Profile 50)
Anti-static	EN 20284 (DIN 22104)	
Self-extinguishing	LOBA NW No. 18.43.21-89-33	
Colour	black	

Ref. No.	Dimensions mm	kg/m²
549 5689	8 x 1 200	11,36
549 5696	8 x 1 400	11,36
549 5706	8 x 2 000	11,36
549 5713	10 x 1 200	14,20
549 5720	10 x 1 400	14,20
549 5737	10 x 2 000	14,20
549 5744	12 x 1 200	17,04
549 5751	12 x 1 400	17,04
549 5768	12 x 2 000	17,04

REMALINE 65

FIELDS OF APPLICATION
- Smooth cover for pulleys
- For re-grooving with Rubber Cut
- Cover for pulleys in order to avoid material build–up with positive influence on belt tracking
- Reduced slippage between belt and pulley through increased coefficient of sliding friction
- Protects the pulleys from wear and corrosion
- For fabric belts and low to medium tension steelcord belts

REMALINE 65/CN

Technical characteristics

Polymer	BR/IR/SBR	DIN ISO 1629
Specific weight	1,13 g/cm³	DIN 53479
Hardness	60 ± 5 Shore A	DIN 53505
Abrasion	120 mm³	DIN 53516
Resilience	45 %	DIN 53512
Standard roll length	10 m	
Colour	black	

Ref. No.	Dimensions mm	kg/m²
549 0055	8 x 1 500	10,00
549 0062	8 x 2 000	10,00
549 0079	10 x 1 500	12,40
549 0086	10 x 2 000	12,40
549 0093	12 x 1 500	14,76
549 0103	12 x 2 000	14,76
549 0110	15 x 1 500	18,30
549 0127	15 x 2 000	18,30
549 0134	20 x 1 500	24,40
549 0141	20 x 2 000	24,40

REMAGRIP 70

FIELDS OF APPLICATION
- Grooved rubber cover for drive pulleys
- Cover for pulleys in order to avoid material build–up with positive influence on belt tracking
- Reduced slippage between belt and pulley through increased coefficient of sliding friction
- Evacuation of moisture and dirt
- Protects the pulleys from wear and corrosion
- Long belt conveyors with large pulley diameters (>800mm)
- For high tension fabric belts and steelcord belts

REMAGRIP 70/CN

Technical characteristics

Polymer	BR/IR/SBR	DIN ISO 1629
Specific weight	1,13 g/cm³	DIN 53479
Hardness	60 ± 5 Shore A	DIN 53505
Abrasion	120 mm³	DIN 53516
Resilience	45 %	DIN 53512
Standard roll length	10 m	
Profile	50-mm-Profile	
Colour	black	

Ref. No.	Dimensions mm	Grooves Wide x Deep mm	kg/m²
549 5799	10 x 2 000	8 x 6	11,00
549 5809	12 x 2 000	8 x 6	13,20
549 5816	15 x 2 000	8 x 6	16,50
549 5823	15 x 2 000	10 x 8	15,90
549 5830	20 x 2 000	10 x 8	21,20

REMAGRIP 70 S/CN

Flame resistant and anti-static (FRAS)

Technical characteristics

Polymer	SBR/BR	DIN ISO 1629
Specific weight	1,25 g/cm³	DIN 53479
Hardness	65 ± 5 Shore A	DIN 53505
Abrasion	125 mm³	DIN 53516
Resilience	40 %	DIN 53512
Standard roll length	10 m	
Profile	50 mm Profil	
Flame resistant	EN 20340	(DIN 22103)
Anti-static	EN 20284	(DIN 22104)
Colour	black	

Ref. No.	Dimensions mm	Grooves Wide x Deep mm	kg/m²
549 5902	12 x 2 000	8 x 6	14,40
549 5926	15 x 2 000	10 x 8	18,00
549 5933	20 x 2 000	10 x 8	24,00

REMAGRIP 70 V/CN

Self-extinguishing and anti-static

Technical characteristics

Polymer	CR	DIN ISO 1629
Specific weight	1,42 g/cm³	DIN 53479
Hardness	63 ± 5 Shore A	DIN 53505
Abrasion	145 mm³	DIN 53516
Resilience	23 %	DIN 53512
Standard roll length	10 m	
Profile	50 mm	
Anti-static	EN 20284	(DIN 22104)
Self-extinguishing	LOBA NW No. 18.43.21-89-33	
Colour	black	

Ref. No.	Dimensions mm	Grooves Wide x Deep mm	kg/m²
549 5847	10 x 2 000	8 x 6	12,00
549 5854	12 x 2 000	8 x 6	16,20
549 5878	15 x 2 000	10 x 8	19,20
549 5885	20 x 2 000	10 x 8	26,40

REMAGRIP 70 HR/CN

Heat resistant

Technical characteristics

Polymer	IR/BR	DIN ISO 1629
Specific weight	1,09 g/cm³	DIN 53479
Hardness	60 ± 5 Shore A	DIN 53505
Abrasion	55 mm³	DIN 53516
Resilience	50 %	DIN 53512
Standard roll length	10 m	
Profile	50 mm	
Resistant to a permanent max. temperature of 80 °C (176 °F) and short peaks up to 100 °C (212 °F)		
Colour	black	

Ref. No.	Dimensions mm	Grooves Wide x Deep mm	kg/m²
549 5957	12 x 2 000	8 x 6	13,20
549 5971	15 x 2 000	10 x 8	16,50
549 5988	20 x 2 000	10 x 8	22,00

REMAGRIP 70/CN-SL Strip Lagging

Technical characteristics

Polymer	BR/IR/SBR	DIN ISO 1629
Specific weight	1,13 g/cm³	DIN 53479
Hardness	60 ± 5 Shore A	DIN 53505
Abrasion	120 mm³	DIN 53516
Resilience	45 %	DIN 53512
Standard roll length	10 m	
Profile	50 mm	
Colour	black	

Ref. No.	Dimensions mm	Grooves Wide x Deep mm
549 5940	10 x 2 060 x 10 000	8 x 6
549 5892	12 x 2 060 x 10 000	8 x 6
549 6004	15 x 2 060 x 10 000	8 x 6
549 5995	18 x 2 060 x 10 000	8 x 6

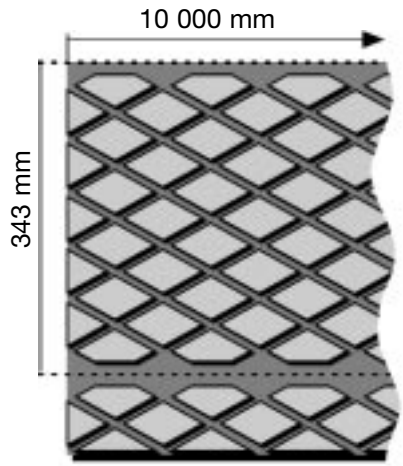

REMAGRIP 70/CN-SL Strip Lagging

REMAGRIP 100

FIELDS OF APPLICATION
- Lagging of drive pulleys for fabric belts
- Rubber cover for drive pulleys operating under extremely wet and muddy conditions
- Good resistance to wear
- Excellent self-cleaning properties
- Good belt tracking

REMAGRIP 100/CN

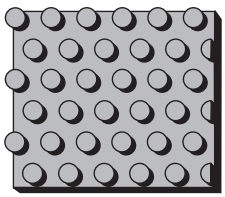

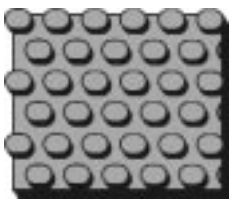

Technical characteristics

Polymer	BR/IR	DIN ISO 1629
Specific weight	1,10 g/cm³	DIN 53479
Hardness	60 ± 5 Shore A	DIN 53505
Abrasion	50 mm³	DIN 53516
Resilience	50 %	DIN 53512
Colour	black	

Ref. No.	Dimensions mm	Knob height mm	Knob shape
539 4340	12 x 1 470 x 2 560	6	round
539 4333	18 x 300 x 2 400	7	oval

REMAGRIP 200

FIELDS OF APPLICATION
- This white rubber lagging was especially developed for the food processing industry
- Pulley cover for rubber and PVC / PVG conveyor belts
- Horizontal grooves ensure excellent evacuation of dirt and easy cleaning

REMAGRIP 200-FDA WHITE, FOOD/CN

Food quality

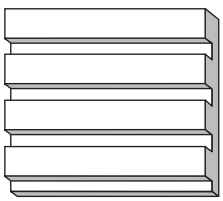

Technical characteristics

Polymer	NR/BR	DIN ISO 1629
Specific weight	1,19 g/cm³	DIN 53479
Hardness	63 ± 5 Shore A	DIN 53505
Abrasion	160 mm³	DIN 53516
Resilience	55 %	DIN 53512
Food contact	Admissible according to FDA regulation No. 21 §177.2600 Admissible according to Category 4, BGVV, 167. Notice, paragraph XXI	
Colour	white	

Ref. No.	Dimensions mm
539 4364	8 x 1 400 x 2 500

REMAGRIP 200-FDA WHITE, OIL, FOOD/CN

Food quality, oil and grease resistant

Technical characteristics

Polymer	NBR	DIN ISO 1629
Specific weight	1,27 g/cm³	DIN 53479
Hardness	65 ± 5 Shore A	DIN 53505
Abrasion	170 mm³	DIN 53516
Resilience	55 %	DIN 53512
Food contact	Admissible according to FDA regulation No. 21 §177.2600 Admissible according to Category 4, BGVV, 167. Notice, paragraph XXI	
Colour	white	

Ref. No.	Dimensions mm
539 4371	8 x 1 400 x 2 500

REMAGRIP C

SPECIAL FEATURES
- Ceramic tiles – 92% alumina oxide (Al_2O_3)
- Tiles molded into rubber
- Single and double row ceramic , plain and with knobs
- Rubber substrate: REMALINE 70/CN
- Protection of the belt due to elastic base
- Highest resistance to wear

FIELDS OF APPLICATION
- Ceramic lagging for pulleys operating under extreme conditions
- Drive pulleys (CK)
- Tail pulleys (CP)
- For wet, clayey, muddy and abrasive material
- For high tension belt conveyors

REMAGRIP CP
Plain ceramic tiles, single row (CP-1) and double row (CP-2)

Ref. No.	Description	Dimensions mm
539 7000	REMAGRIP CP-1	2 595 x 495 x 12
539 7017	REMAGRIP CP-2	2 595 x 505 x 12

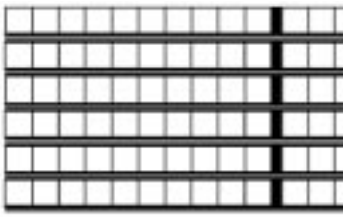
CP-1

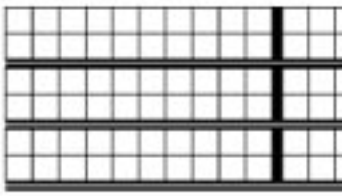
CP-2

REMAGRIP CK
Ceramic tiles with knobs, single row (CK-1) and double row (CK-2)

Ref. No.	Description	Dimensions mm
539 7024	REMAGRIP CK-1	2 595 x 495 x 12
539 7031	REMAGRIP CK-2	2 595 x 505 x 12

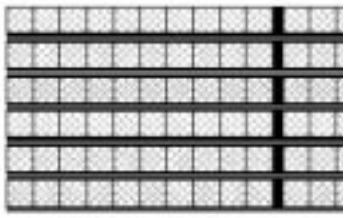
CK-1

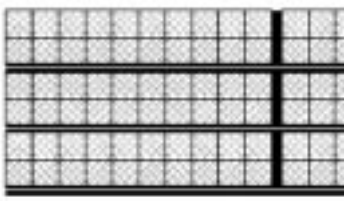
CK-2

REMAGRIP CK-1U
Ceramic tiles with knobs, single row

Ref. No.	Description	Dimensions mm
539 7048	REMAGRIP CK-1U	2 595 x 495 x 12

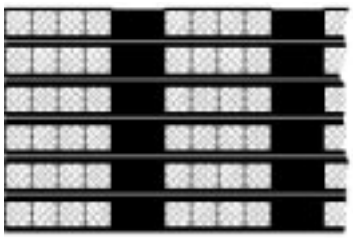
CK-1U

CN CROWNING WEDGE

FIELDS OF APPLICATION
- Cost effective crowning of pulleys
- Improvement of the belt tracking especially for side loading of the material
- Reduced wear of the pulley cover due to uniform distribution of compression over the complete pulley surface

CN CROWNING WEDGE

Ref. No.	Description	Height mm	Width mm	Length mm
528 5545	CN Crowning wedge	1/3	255	2500

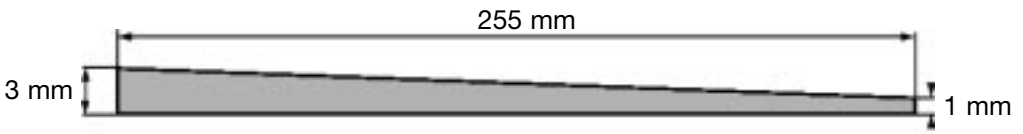

Pulley crowning with CN - crowning wedge and CN - filler rubber

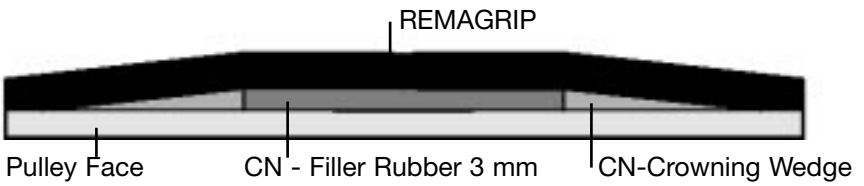

REMASLEEVE VSB-RE 25/CN

FIELDS OF APPLICATION
- Rubber sleeves for carrying idlers and return idlers
- Protection against caking, wear and corrosion
- Absorption of impact (20mm) on feeding stations

REMASLEEVE VSB-RE 25/CN

Technical characteristics

Polymer	NR	DIN ISO 1629
Specific weight	1,02 g/cm³	DIN 53479
Hardness	35 ± 5 Shore A	DIN 53505
Abrasion (5N)	95 mm³	DIN 53516
Resilience	70 %	DIN 53512
CN bonding layer		
Colour	black	

Idler Diameter mm	Length mm	Thickness 7 mm Ref. No.	Thickness 20 mm Ref. No.
63,5	800	537 0027	537 4322
63,5	1 000	537 0120	537 4425
63,5	1 300	537 0223	537 4528
80	800	537 0034	537 4339
80	1 000	537 0137	537 4432
80	1 300	537 0230	537 4535
89	800	537 0041	537 4346
89	1 000	537 0144	537 4449
89	1 300	537 0247	537 4542
108	800	537 0058	537 4353
108	1 000	537 0151	537 4456
108	1 300	537 0254	537 4559
133	800	537 0065	537 4360
133	1 000	537 0168	537 4463
133	1 300	537 0261	537 4566
150	800	537 0072	537 4377
150	1 000	537 0175	537 4470
150	1 300	537 0278	537 4573

Minimum order quantity: each size 20 pieces

Idler Diameter Inches	Length mm	Thickness 7 mm Ref. No.
2	800	537 0010
2	1 000	537 0113
2	1 300	537 0216
3	800	537 0089
3	1 000	537 0182
3	1 300	537 0285
4	800	537 0096
4	1 000	537 0199
4	1 300	537 0292
5	800	537 0106
5	1 000	537 0209
5	1 300	537 0302

Minimum order quantity: each size 20 pieces

REMASLEEVE VSB-RE 25, ORANGE/CN

FIELDS OF APPLICATION
- Rubber sleeves for carrying idlers and return idlers
- Protection against caking, wear and corrosion

REMASLEEVE VSB-RE 25, ORANGE/CN

Technical characteristics

Polymer	NR	DIN ISO 1629
Specific weight	0,98 g/cm³	DIN 53479
Hardness	30 ± 5 Shore A	DIN 53505
Abrasion (5N)	90 mm³	DIN 53516
Resilience	70 %	DIN 53512
CN bonding layer		
Colour	orange	

Ref. No.	Description	Idler Diameter mm	Length mm	Thickness mm
537 1215	VSB orange	63,5	800	7
537 1318	VSB orange	63,5	1 000	7
537 1411	VSB orange	63,5	1 300	7
537 1239	VSB orange	80	800	7
537 1332	VSB orange	80	1 000	7
537 1435	VSB orange	80	1 300	7
537 1246	VSB orange	89	800	7
537 1349	VSB orange	89	1 000	7
537 1442	VSB orange	89	1 300	7
537 1260	VSB orange	108	800	7
537 1363	VSB orange	108	1 000	7
537 1466	VSB orange	108	1 300	7
537 1284	VSB orange	133	800	7
537 1387	VSB orange	133	1 000	7
537 1480	VSB orange	133	1 300	7
537 1291	VSB orange	150	800	7
537 1394	VSB orange	150	1 000	7
537 1497	VSB orange	150	1 300	7

Minimum order quantity: each size 20 pieces

Ref. No.	Description	Idler Diameter Inches	Length mm	Thickness mm
537 1208	VSB orange	2	800	7
537 1301	VSB orange	2	1 000	7
537 1404	VSB orange	2	1 300	7
537 1222	VSB orange	3	800	7
537 1325	VSB orange	3	1 000	7
537 1428	VSB orange	3	1 300	7
537 1253	VSB orange	4	800	7
537 1356	VSB orange	4	1 000	7
537 1459	VSB orange	4	1 300	7
537 1277	VSB orange	5	800	7
537 1370	VSB orange	5	1 000	7
537 1473	VSB orange	5	1 300	7

Minimum order quantity: each size 20 pieces

REMASLEEVE VSB-RE 25 WEISS, LEB/CN

FIELDS OF APPLICATION
- Food quality according to Category 4, BGVV, 167. notice, section 21
- Rubber sleeves for carrying idlers and return idlers
- Protection against caking and corrosion

REMASLEEVE VSB-RE 25 WHITE, FOOD/CN
Food quality

Technical characteristics

Polymer	NR	DIN ISO 1629
Specific weight	1,02 g/cm³	DIN 53479
Hardness	30 ± 5 Shore A	DIN 53505
Abrasion (5N)	100 mm³	DIN 53516
Resilience	68 %	DIN 53512
CN bonding layer		
Colour	white	

Ref. No.	Description	Idler Diameter mm	Length mm	Thickness mm
537 0924	VSB-RE 25 white	63,5	800	7
537 1026	VSB-RE 25 white	63,5	1 000	7
537 1129	VSB-RE 25 white	63,5	1 300	7
537 0931	VSB-RE 25 white	80	800	7
537 1033	VSB-RE 25 white	80	1 000	7
537 1136	VSB-RE 25 white	80	1 300	7
537 0948	VSB-RE 25 white	89	800	7
537 1040	VSB-RE 25 white	89	1 000	7
537 1143	VSB-RE 25 white	89	1 300	7
537 0955	VSB-RE 25 white	108	800	7
537 1057	VSB-RE 25 white	108	1 000	7
537 1150	VSB-RE 25 white	108	1 300	7
537 0962	VSB-RE 25 white	133	800	7
537 1064	VSB-RE 25 white	133	1 000	7
537 1167	VSB-RE 25 white	133	1 300	7

Minimum order quantity: each size 20 pieces

REMASLEEVE VSB-E 40/CN

FIELDS OF APPLICATION
- Rubber sleeves for carrying idlers and return idlers
- Protection against caking, wear and corrosion

REMASLEEVE VSB-E 40/CN

Technical characteristics

Polymer	NR/BR	DIN ISO 1629
Specific weight	1,03 g/cm³	DIN 53479
Hardness	40 ± 5 Shore A	DIN 53505
Abrasion	150 mm³	DIN 53516
Resilience	60 %	DIN 53512
CN bonding layer		
Colour	black	

Ref. No.	Description	Idler Diameter mm	Length mm	Thickness mm
537 5022	VSB-E 40	63,5	2 750	7
537 5039	VSB-E 40	80	2 750	7
537 5046	VSB-E 40	89	2 750	7
537 5053	VSB-E 40	108	2 750	7
537 5060	VSB-E 40	133	2 750	7
537 5383*	VSB-E 40	150	800	7
537 5390*	VSB-E 40	150	1 000	7
537 5400*	VSB-E 40	150	1 300	7

*** Minimum order quantity: each size 20 pieces**

Ref. No.	Description	Idler Diameter Inches	Length mm	Thickness mm
537 5266*	VSB-E 40	2	800	7
537 5273*	VSB-E 40	2	1 000	7
537 5280*	VSB-E 40	2	1 300	7
537 5297*	VSB-E 40	3	800	7
537 5307*	VSB-E 40	3	1 000	7
537 5314*	VSB-E 40	3	1 300	7
537 5321*	VSB-E 40	4	800	7
537 5338*	VSB-E 40	4	1 000	7
537 5345*	VSB-E 40	4	1 300	7
537 5352*	VSB-E 40	5	800	7
537 5369*	VSB-E 40	5	1 000	7
537 5376*	VSB-E 40	5	1 300	7

*** Minimum order quantity: each size 20 pieces**

REMASLEEVE KSB-E 60/CN

FIELDS OF APPLICATION
- Rubber sleeves for carrying idlers and return idlers
- Protection against wear and corrosion

REMASLEEVE-KSB-E 60/CN

Technical characteristics

Polymer	NR/SBR/BR	DIN ISO 1629
Specific weight	1,14 g/cm³	DIN 53479
Hardness	60 ± 5 Shore A	DIN 53505
Abrasion	100 mm³	DIN 53516
Resilience	43 %	DIN 53512
CN bonding layer		
Colour	black	

Ref. No.	Description	Idler Diameter mm	Length mm	Thickness mm
537 3017*	KSB-E 60	50	800	4
537 3110*	KSB-E 60	50	1 000	4
537 3206*	KSB-E 60	50	1 300	4
537 5125	KSB-E 60	63,5	2 750	4
537 5132	KSB-E 60	80	2 750	4
537 5149	KSB-E 60	89	2 750	4
537 5156	KSB-E 60	108	2 750	4
537 5163	KSB-E 60	133	2 750	4
537 3079*	KSB-E 60	150	800	4
537 3172*	KSB-E 60	150	1 000	4
537 3275*	KSB-E 60	150	1 300	4

*** Minimum order quantity: each size 20 pieces**

ACCESSORIES FOR VSB AND KSB

MOUNTING SET FOR VSB AND KSB IDLER SLEEVES

For quick and easy pneumatic mounting of the sleeves, consisting of one mounting unit each size (Ref. Nos. 5952421 – 5952490) the corresponding fastening strap and one pedal operated air injection device with flexible hose.

Ref. No.	Description
596 7478	Mounting Set for VSB and KSB

MOUNTING ADAPTERS FOR VSB AND KSB

Ref. No.	Description	Idler Diameter mm
595 2421	Mounting Adapter	63,5
595 2438	Mounting Adapter	80
595 2445	Mounting Adapter	89
595 2469	Mounting Adapter	108
595 2483	Mounting Adapter	133
595 2490	Mounting Adapter	150

REMASKIRT 40

FIELDS OF APPLICATION
- Skirting rubber and scraper for washed material

REMASKIRT 40

Technical characteristics

Polymer	BR/NR	DIN ISO 1629
Specific weight	1,00 g/cm³	DIN 53479
Hardness	55 ± 5 Shore A	DIN 53505
Abrasion	110 mm³	DIN 53516
Resilience	70 %	DIN 53512
Standard roll length	10 m	
Colour	green	

Ref. No.	Thickness mm	Width mm	kg/m
550 1023	5	80	0,43
550 1030	5	100	0,53
550 1047	5	2 000	10,80
549 6011	6	80	0,52
549 6028	6	100	0,65
549 6035	6	2 000	12,96
550 1102	7	80	0,60
550 1119	7	100	0,76
550 1126	7	120	0,91
550 1133	7	150	1,13
550 1157	7	2 000	15,12
549 6059	8	80	0,69
549 6066	8	100	0,86
549 6073	8	120	1,04
549 6080	8	150	1,30
549 6097	8	2 000	17,28
549 6114	10	100	1,08
549 6121	10	120	1,30
549 6138	10	150	1,62
549 6145	10	200	2,16
549 6152	10	2 000	21,60
549 6176	12	100	1,30
549 6183	12	120	1,56
549 6190	12	150	1,94
549 6200	12	200	2,59
549 6217	12	2 000	25,92
549 6248	15	150	2,43
549 6255	15	200	3,24
549 6279	15	2 000	32,40
549 6303	20	150	3,24
549 6310	20	200	4,32
549 6334	20	2 000	43,20
549 6358	25	150	4,05
549 6365	25	200	5,40
549 6389	25	2 000	54,00

REMASKIRT 50

FIELDS OF APPLICATION
- Skirting rubber and scraper for washed and sticky material

REMASKIRT 50

Technical characteristics

Polymer	NR	DIN ISO 1629
Specific weight	1,08 g/cm³	DIN 53479
Hardness	50 ± 5 Shore A	DIN 53505
Abrasion	130 mm³	DIN 53516
Resilience	65 %	DIN 53512
Standard roll length	10 m	
Colour	orange	

Ref. No.	Thickness mm	Width mm	kg/m
550 1827	5	80	0,46
550 1834	5	100	0,58
550 1841	5	2 000	11,50
549 6413	6	80	0,55
549 6420	6	100	0,69
549 6437	6	2 000	13,80
550 1906	7	100	0,81
550 1913	7	120	0,97
550 1920	7	150	1,21
550 1937	7	2 000	16,10
549 6451	8	80	0,74
549 6468	8	100	0,92
549 6475	8	120	1,10
549 6482	8	150	1,38
549 6499	8	2 000	18,40
549 6516	10	100	1,15
549 6523	10	120	1,38
549 6530	10	150	1,73
549 6547	10	200	2,30
549 6554	10	2 000	23,00
549 6585	12	100	1,38
549 6592	12	120	1,66
549 6602	12	150	2,07
549 6619	12	200	2,76
549 6626	12	2 000	27,60
549 6640	15	150	2,59
549 6657	15	200	3,45
549 6671	15	2 000	34,50
549 6695	20	150	3,45
549 6705	20	200	4,60
549 6729	20	2 000	46,00
549 6736	25	2 000	57,50
549 6750	30	2 000	69,00

REMASKIRT CB 195

FIELDS OF APPLICATION
- Skirting rubber seal for conveyor belts transporting fine to dusty material

REMASKIRT CB 195

Technical characteristics

Polymer:	BR/IR/SBR	DIN ISO 1629
Specific weight	1,12 g/cm³	DIN 53479
Hardness	62 ± 5 Shore A	DIN 53505
Abrasion	90 mm³	DIN 53516
Resilience	42 %	DIN 53512
Standard roll length	31 m	
Colour	black	

Ref. No.	Thickness mm	Width mm
550 2651	6/10	195

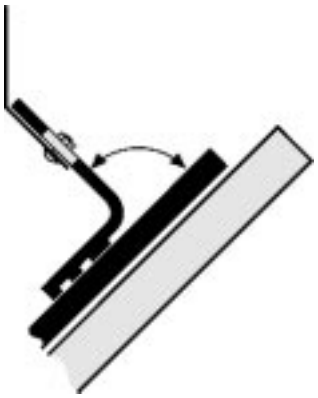

REMASLIDE BARS

FEATURES
- Combination of rubber and UHMW polyethylene
- Low friction between conveyor belt and REMASLIDE impact bars
- Distance between conveyor belt and impact bars must be 10 to 20 mm (when conveyor belt is not loaded)
- Steel fastening profile
- Impact rubber: black - PE: green (10mm thick)

FIELDS OF APPLICATION
- At material feeding and transfer points as impact protection for conveyor belts
- Good sealing effect when used in conjunction with REMASKIRT

REMASLIDE BARS

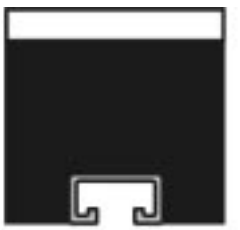

Ref. No.	Description	Height mm	Width mm	Length mm	Weight kg
539 0423	KG-02/PE	52	100	1 220	7
539 0430	KG-03/PE	80	100	1 220	11
539 0447	KG-04/PE	100	100	1 220	13,5

FASTENING UNITS

- TT-fastener with washer and self-locking nut
- 4 fastening units

Ref. No.	Description	Torque	Dimensions
539 3501	TT Fastening Unit IV	60 Nm	M16 x 40
539 3468	TT Fastening Unit IV	60 Nm	M16 x 60
539 3475	TT Fastening Unit IV	60 Nm	M16 x 80

REMASLIDE SET (BAR AND FASTENING UNITS)

complete with 4 TT Fastening Units (M16 x 40)

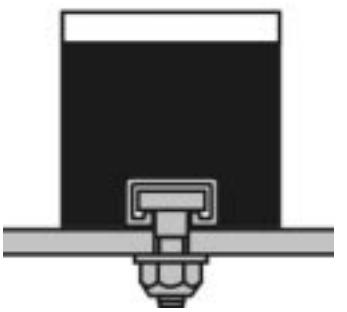

Ref. No.	Description	Height mm	Width mm	Length mm
539 0605	KG-02/PE with Fastening Units	52	100	1 220
539 0612	KG-03/PE with Fastening Units	80	100	1 220
539 0629	KG-04/PE with Fastening Units	100	100	1 220

REMACLEAN 60

FIELDS OF APPLICATION
- Scraper and skirting rubber for granulated, non-sticky material

REMACLEAN 60

Technical characteristics

Polymer	BR/IR/SBR	DIN ISO 1629
Specific weight	1,12 g/cm³	DIN 53479
Hardness	62 ± 5 Shore A	DIN 53505
Abrasion	90 mm³	DIN 53516
Resilience	42 %	DIN 53512
Standard roll length	10 m	
Colour	black	

Ref. No.	Thickness mm	Width mm	kg/m
549 6987	5	100	0,59
549 6994	5	120	0,71
549 7003	5	2 000	11,80
549 7254	7	100	0,83
549 7261	7	120	0,99
549 7278	7	2 000	16,52
549 7010	8	100	0,94
549 7027	8	120	1,13
549 7034	8	2 000	18,88
549 7065	10	120	1,42
549 7072	10	150	1,77
549 7089	10	2 000	23,60
549 7106	15	150	2,66
549 7113	15	200	3,54
549 7137	15	2 000	35,40
549 7151	20	150	3,54
549 7168	20	200	4,72
549 7182	20	2 000	47,20
549 7209	30	200	7,08
549 7216	30	250	8,85
549 7247	30	2 000	70,80

REMACLEAN 70

FIELDS OF APPLICATION
- Scraper and skirting rubber for granulated, non-sticky material
- Highly abrasion resistant

REMACLEAN 70

Technical characteristics

Polymer	NR/BR	DIN ISO 1629
Specific weight	1,10 g/cm³	DIN 53479
Hardness	60 ± 5 Shore A	DIN 53505
Abrasion	50 mm³	DIN 53516
Resilience	50 %	DIN 53512
Standard roll length	10 m	
Colour	black	

Ref. No.	Thickness mm	Width mm	kg/m
550 2527	5	100	0,58
550 2534	5	120	0,69
550 2541	5	2 000	11,50
550 2606	7	100	0,81
550 2613	7	120	0,97
550 2637	7	2 000	16,10
549 6815	10	120	1,38
549 6822	10	150	1,73
549 6839	10	2 000	23,00
549 6853	15	150	2,59
549 6860	15	200	3,45
549 6884	15	2 000	34,50
549 6901	20	150	3,45
549 6918	20	200	4,60
549 6925	20	2 000	46,00
549 6956	30	200	6,90
549 6963	30	2 000	69,00

REMACLEAN 70

REMACLEAN 70 V

Self-extinguishing and anti-static

Technical characteristics

Polymer	CR	DIN ISO 1629
Specific weight	1,42 g/cm³	DIN 53479
Hardness	63 ± 5 Shore A	DIN 53505
Abrasion	145 mm³	DIN 53516
Resilience	23 %	DIN 53512
Standard roll length	10 m	
Anti-static	EN 20284 (DIN 22104)	
Self-extinguishing	LOBA NW No. 18.43.21-91-4	
Colour	black	

Ref. No.	Thickness mm	Width mm	kg/m
549 7319	8	100	1,17
549 7326	8	120	1,40
549 7333	8	2 000	23,36
549 7364	10	120	1,75
549 7371	10	150	2,19
549 7388	10	2 000	29,20
549 7412	15	150	3,29
549 7429	15	200	4,38
549 7436	15	2 000	43,80
549 7450	20	150	4,38
549 7467	20	200	5,84
549 7474	20	2 000	58,40
549 7508	30	150	6,57
549 7498	30	200	8,76
549 7515	30	2 000	87,60

REMACLEAN 70

REMACLEAN 70 S

Flame resistant and anti–static (FRAS)

Technical characteristics

Polymer	SBR/BR	DIN ISO 1629
Specific weight	1,25 g/cm³	DIN 53479
Hardness	65 ± 5 Shore A	DIN 53505
Abrasion	125 mm³	DIN 53516
Resilience	40 %	DIN 53512
Standard roll length	10 m	
Flame resistant	EN 20340	(DIN 22 103)
Anti-static	EN 20284	(DIN 22104)
Colour	black	

Ref. No.	Thickness mm	Width mm	kg/m
549 8208	10	120	1,58
549 8215	10	150	1,98
549 8222	10	2 000	26,40
549 8246	15	150	2,97
549 8253	15	200	3,96
549 8260	15	2 000	39,60
549 8284	20	150	3,96
549 8291	20	200	5,28
549 8301	20	2 000	52,80
549 8325	30	200	7,92
549 8332	30	250	9,90
549 8349	30	2 000	79,20

COMBI SCRAPER RUBBER (CAB)

REMACLEAN CAB, GREEN

FIELDS OF APPLICATION
- Combi scraper rubber for granulated, slightly sticky and washed material
- Excellent cleaning effect

Technical characteristics
The scraper rubber may protrude from its support up to 1.5 times its thickness

Polymer	BR/NR outside	
	BR/NR inside	DIN ISO 1629
Specific weight	1,13/1,00/1,13 g/cm³	DIN 53479
Hardness	70/55/70 ± 5 Shore A	DIN 53505
Abrasion	90/110/90 mm³	DIN 53516
Resilience	40/70/40 %	DIN 53512
Standard roll length	10 m, from 40 mm thickness: 5 m	
Colour	black/green/black	

Ref. No.	Thickness mm	Width mm	kg/m
549 8411	15	100	1,77
549 8428	15	120	2,12
549 8435	15	150	2,66
549 8442	15	2 000	35,40
549 8459	20	100	2,32
549 8466	20	120	2,78
549 8473	20	150	3,48
549 8497	20	2 000	46,40
549 8514	25	120	3,42
549 8521	25	150	4,28
549 8538	25	200	5,70
549 8552	25	2 000	57,00
549 8576	30	120	4,03
549 8583	30	150	5,04
549 8590	30	200	6,72
549 8600	30	250	8,40
549 8624	30	2 000	67,20
549 8631	40	250	11,20
549 8648	40	2 000	89,60
549 8655	50	250	14,00
549 8662	50	2 000	112,00

COMBI SCRAPER RUBBER (CAB)

REMACLEAN CAB, GREY

FIELDS OF APPLICATION
- Combi scraper rubber for sticky and muddy material
- Excellent cleaning effect

Technical characteristics
The scraper rubber may protrude from its support up to 1.5 times its thickness

Polymer	BR/IR/NR outside NR inside	DIN ISO 1629
Specific weight	1,23/1,08/1,23 g/cm³	DIN 53479
Hardness	85/50/85 ± 5 Shore A	DIN 53505
Abrasion	140/140/140 mm³	DIN 53516
Resilience	35/65/35 %	DIN 53512
Standard roll length	10 m, from 40 mm thickness: 5 m	
Colour	black/grey/black	

Ref. No.	Thickness mm	Width mm	kg/m
549 9269	15	100	1,88
549 9276	15	120	2,25
549 9283	15	150	2,81
549 9300	15	2 000	37,50
549 9317	20	100	2,50
549 9324	20	120	3,00
549 9331	20	150	3,75
549 9355	20	2 000	50,00
549 9379	25	120	3,66
549 9386	25	150	4,58
549 9403	25	200	6,10
549 9410	25	250	7,63
549 9434	25	2 000	61,00
549 9458	30	120	4,32
549 9465	30	150	5,40
549 9472	30	200	7,20
549 9489	30	250	9,00
549 9506	30	2 000	72,00
549 9513	40	250	12,00
549 9520	40	2 000	96,00
549 9537	50	250	15,00
549 9544	50	2 000	120,00

COMBI SCRAPER RUBBER (CAB)

REMACLEAN CAB V

Self-extinguishing and anti-static

Technical characteristics

The scraper rubber may protrude from its support up to 1.5 times its thickness

Polymer	CR outside	
	CR inside	DIN ISO 1629
Specific weight	1,41/1,42/1,41 g/cm³	DIN 53479
Hardness	75/63/75 ± 5 Shore A	DIN 53505
Abrasion	120/145/120 mm³	DIN 53516
Resilience	30/23/30 %	DIN 53512
Standard roll length	10 m	
Anti-static	EN 20284 (DIN 22104)	
Self-extinguishing	LOBA NW No. 18.43.21-67-4	
Colour	black/black/black	

Ref. No.	Thickness mm	Width mm	kg/m
549 8703	15	100	2,31
549 8710	15	120	2,77
549 8727	15	150	3,47
549 8741	15	2 000	46,20
549 8758	20	100	3,08
549 8765	20	120	3,70
549 8772	20	150	4,62
549 8796	20	2 000	61,60
549 8813	25	120	4,62
549 8820	25	150	5,78
549 8837	25	200	7,70
549 8844	25	250	9,63
549 8851	25	2 000	77,00
549 8875	30	120	5,54
549 8882	30	150	6,93
549 8899	30	200	9,24
549 8909	30	250	11,55
549 8923	30	2 000	92,40

REMACLEAN KWA
T-BAR SCRAPERS

FEATURES
- Abrasion resistant rubber qualities
- Long service life
- Three scrapers in one
- Rigid, torsion-free construction
- Fast and simple exchangeability
- Quick mounting with REMA TIP TOP Tension Units STANDARD or PRECISION

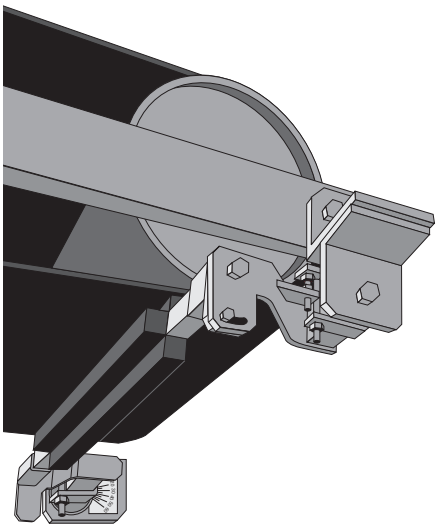

REMACLEAN KWA
Highly abrasion resistant

Technical characteristics

Polymer	NR/BR	DIN ISO 1629
Hardness	60 ± 5 Shore A	DIN 53505
Abrasion	50 mm³	DIN 53516
Colour	black	

Ref. No.	Type/ for belt width mm
578 7012	B 500
578 7029	B 650
578 7036	B 800
578 4125	B 900
578 7043	B 1 000
578 7050	B 1 200
578 7270	B 1 400
578 7407	B 1 600

REMACLEAN KWA S
Flame resistant and anti-static

Technical characteristics

Polymer	SBR/BR	DIN ISO 1629
Hardness	65 ± 5 Shore A	DIN 53505
Abrasion	125 mm³	DIN 53516
Flame resistant	EN 20340	(DIN 22 103)
Anti-static	EN 20284	(DIN 22104)
Colour	black	

Ref. No.	Type/ for belt width mm
578 7067	B 500
578 7074	B 650
578 7081	B 800
578 7098	B 1 000
578 7108	B 1 200
578 7287	B 1 400

REMACLEAN KWA
T-BAR SCRAPERS

REMACLEAN KWA, OIL
Oil and grease resistant

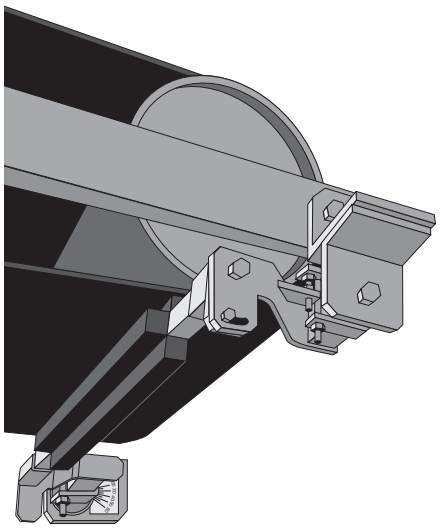

Technical characteristics

Polymer	NBR	DIN ISO 1629
Hardness	60 ± 5 Shore A	DIN 53505
Abrasion	125 mm³	DIN 53516
Colour	black	

Ref. No.	Type/ for belt width mm
578 7160	B 500
578 7177	B 650
578 7184	B 800
578 7191	B 1 000
578 7201	B 1 200
578 7304	B 1 400

REMACLEAN KWA-FDA WHITE, FOOD
Food quality

Technical characteristics

Polymer	NR/BR	DIN ISO 1629
Hardness	63 ± 5 Shore A	DIN 53505
Abrasion	160 mm³	DIN 53516
Food contact	Admissible according to FDA regulation No. 21 §177.2600 Admissible according to Category 4, BGVV, 167. Notice, paragraph XXI	
Colour	white	

Ref. No.	Type/ for belt width mm
578 7115	B 500
578 7122	B 650
578 7139	B 800
578 7146	B 1 000
578 7153	B 1 200
578 7294	B 1 400

REMACLEAN KWA V
Self-extinguishing and anti-static

Technical characteristics

Polymer	CR	DIN ISO 1629
Hardness	63 ± 5 Shore A	DIN 53505
Abrasion	145 mm³	DIN 53516
Anti-static	According to EN 20284 (DIN 22104)	
Self-extinguishing	LOBA NW No. 18.43.21-91-24	
Colour	black	

Ref. No.	Type/ for belt width mm
578 7218	B 500
578 7225	B 650
578 7232	B 800
578 7249	B 1 000
578 7256	B 1 200
578 7263	B 1 400

REMACLEAN PUR
POLYURETHANE DUAL SCRAPER

FEATURES
- Highly abrasion resistant polyurethane
- Oil and grease resistant
- Rigid, torsion-free construction
- Two scrapers in one
- Quick mounting with REMA TIP TOP Tension Units STANDARD or PRECISION

FIELDS OF APPLICATION
- Gently belt cleaning
- Suitable for oil and grease containing materials

REMACLEAN PUR

Technical characteristics

Polymer	AU	DIN ISO 1629
Hardness	90 ± 5 Shore A	DIN 53505
Abrasion	80 mm^3	DIN 53516
Colour	brown	

Ref. No.	Type/ for belt width mm
578 7500	B 500
578 7517	B 650
578 7524	B 800
578 7531	B 1 000
578 7548	B 1 200
578 7555	B 1 400
578 7562	B 1 600

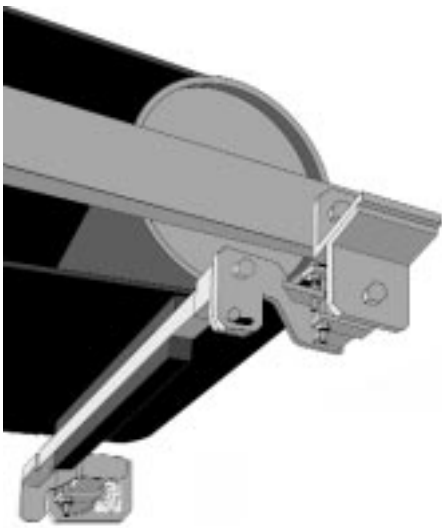

REMACLEAN C
CERAMIC SCRAPER

FEATURES
- Excellent cleaning performance
- Highly abrasion resistant $Al_2 O_3$ ceramic edge
- Ceramic edge durably embedded into elastic rubber
- Rigid, torsion-free steel construction
- Easy installation with REMA TIP TOP Tension Unit PRECISION
- Quickly and easily changeable

FIELDS OF APPLICATION
- Especially suitable for extremely sticky material (slags, FGD gypsum) and power station coal

REMACLEAN C

Ref. No.	Type/ for belt width mm
578 7593	B 400
578 7603	B 500
578 8602	B 600
578 7610	B 650
578 8619	B 750
578 7627	B 800
578 8626	B 900
578 7634	B 1 000
578 8633	B 1 050
578 7641	B 1 200
578 8640	B 1 350
578 7658	B 1 400
578 7665	B 1 600

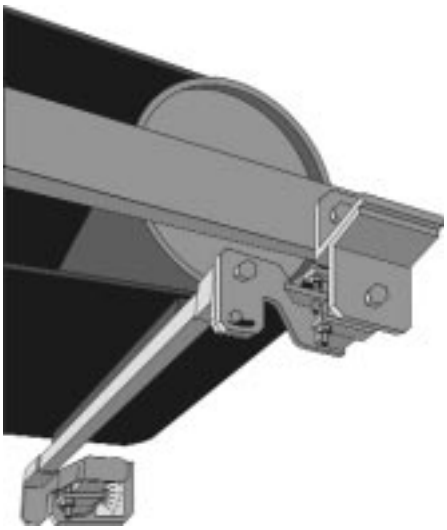

REMACLEAN M
METAL SCRAPER

FEATURES
- Highly abrasion resistant metal carbide edge
- Metal edge durably embedded in rubber
- Elastic rubber reduces vibrations
- Rigid, torsion-free steel construction
- Easy installation with REMA TIP TOP Tension Unit PRECISION
- Quickly and easily changeable without special tools

FIELDS OF APPLICATION
- Excellent cleaning performance, especially recommended for material containing quartz (sand, aggregates, glass)

REMACLEAN M

Ref. No.	Type/ for belt width mm
578 9003	B 400
578 9010	B 500
578 9027	B 600
578 9034	B 650
578 9041	B 750
578 9058	B 800
578 9065	B 900
578 9072	B 1 000
578 9089	B 1 050
578 9096	B 1 200
578 9106	B 1 350
578 9113	B 1 400
578 9120	B 1 600

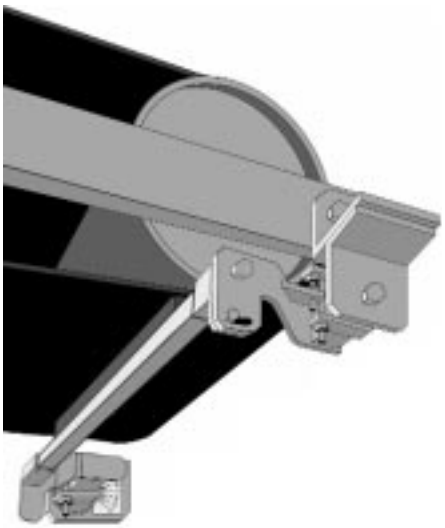

REMACLEAN DUO MULTI-BLADE SCRAPER

FEATURES
- Excellent cleaning effect through primary scraper and secondary scraper in one unit
- Flexible support ensures optimum adaptability of each individual carbide blade
- Gentle conveyor belt cleaning through low pressure
- Easy installation with REMA TIP TOP Tension Unit PRECISION
- Quickly and easily changeable without special tools

REMACLEAN DUO

Ref. No.	Type/ for belt width mm
578 7809	B 500
578 7816	B 650
578 7823	B 800
578 7830	B 1 000
578 7847	B 1 200
578 7854	B 1 400

Spare parts for REMACLEAN DUO

Ref. No.	Description
578 8042	Steel blade with hard metal profile BB 500 to1 400
578 7902	Primary scraper for B 500 (Ref. No. 578 7809)
578 7919	Primary scraper for B 650 (Ref. No. 578 7816)
578 7926	Primary scraper for B 800 (Ref. No. 578 7823)
578 7933	Primary scraper for B 1 000 (Ref. No. 578 7830)
578 7940	Primary scraper for B 1 200 (Ref. No. 578 7847)
578 7957	Primary scraper for B 1 400 (Ref. No. 578 7854)
578 8059	Secondary scraper arm No. 2 for B 500 to B 800, short
578 8066	Secondary scraper No. 2 cpl. (steel blade, arm and bolt) B 500 to B 800, short
578 8073	Secondary scraper arm No. 3 for B 500 to B 800, long
578 8080	Secondary scraper No. 3 cpl. (steel blade, arm and bolt) for B 500 to B 800, long
578 8097	Secondary scraper arm No. 5 for B > 1 000, short
578 8107	Secondary scraper No. 5 cpl. (steel blade, arm and bolt) for B > 1 000, short
578 8114	Secondary scraper arm No. 6 for B > 1 000, long
578 8121	Secondary scraper No. 6 cpl. (steel blade, arm and bolt) for B > 1 000, long

TENSION UNITS

TENSION UNIT STANDARD

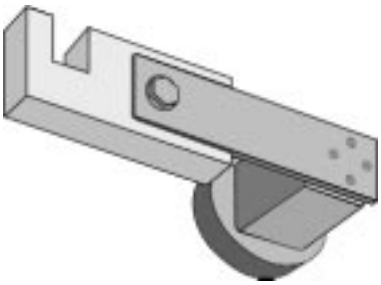

FIELDS OF APPLICATION
- For REMACLEAN KWA and REMACLEAN PUR

Technical characteristics
Tension unit STANDARD cpl consisting of:
- 2 Tensioning devices SE 27 or Se 38
- 2 Holders SE 27 or SE 38
- 4 Screws

Ref. No.	Description
578 8389	Tension Unit STANDARD SE 27 cpl. for scraper B 500 to B 800
578 8396	Tension Unit STANDARD SE 38 cpl. for scraper B 1 000 bis B 1 600
578 8406	Tensioning device for SE 27 for scraper B 500 bis B 800
578 8420	Support for SE 27 for scraper B 500 bis B 800
578 8413	Tensioning device for SE 38 for scraper B 1 000 bis B 1 600
578 8437	Support for SE 38 for scraper B 1 000 bis B 1 600

TENSION UNIT PRECISION

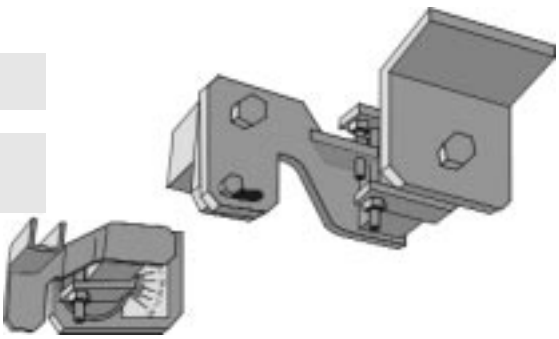

FIELDS OF APPLICATION
- For REMACLEAN C, REMACLEAN M and REMACLEAN DUO

Technical characteristics
Advantages of PRECISION against STANDARD:
- Exact adjustability on both sides
- Stopping unit prevents damage to the belt

Ref. No.	Description
578 8310	Tension Unit PRECISION SE 27 for scraper B 500 to B 800
578 8341	Tension Unit PRECISION SE 38 for scraper B 1 000
578 8358	Tension Unit PRECISION SE 45 for scraper B 1 200 to B 1 600

REMACLEAN HM-U1 Belt Cleaning System

FEATURES
- Excellent cleaning performance
- Especially selected hard metals ensure long service life
- Modular construction consisting of support tube extension, spindle assembly and rubber spring elements
- Uniform and optimum pressure against conveyor belt easily adjustable
- Installation of the spindle assembly outside of the conveyor belt possible
- Can be adjusted by one person without special knowledge
- Declining outer hard metal blades prevent damage to the belt edges
- Suitable for shuttle belt conveyors

REMACLEAN HM-U1

Belt width mm	REMACLEAN HM-U1 Ref. No.	REMACLEAN HM-U1 HR Ref. No.
400	578 9137	578 3281
500	578 9144	578 3298
600/650	578 9151	578 3308
750/800	578 9168	578 3315
900	578 9175	578 3322
1 000/1 050	578 9182	578 3339
1 200	578 9199	
1 350/1 400	578 9209	
1 600	578 9216	
1 800	578 9223	
2 000	578 9230	
2 200	578 9247	
2 400	578 9254	

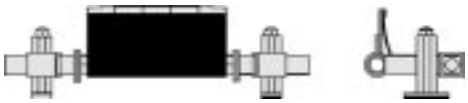

Accessories

Ref. No.	Description
578 9508	Reversing stop for belt width 400 - 650
578 9515	Reversing stop for belt width 750 - 1 050
578 9522	Reversing stop for belt width 1 200 - 1 400
578 9539	Reversing stop for belt width 1 600 - 2 500
578 9845	Off-set plate (up to belt width 800) Set: 2 pcs with faste-
ning	elements for belt width from 400 – 800

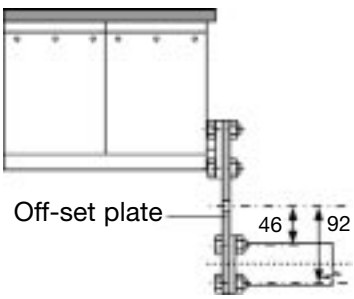

Spare parts

Ref. No.	Description
Spare parts for REMACLEAN HM-U1	
578 9326	Metal carbide scraper segment HMT-U1/120
	with PE skirting, center
578 9333	Metal carbide scraper segment HMT-U1/120
	with PE skirting, right
578 9340	Metal carbide scraper segment HMT-U1/120
	with PE skirting, left
Spare parts for REMACLEAN HM-U1HR	
578 9807	Metal carbide scraper segment HMT-U1/120
	with VA skirting, center
578 9814	Metal carbide scraper segment HMT-U1/120
	with VA skirting, right
578 9821	Metal carbide scraper segment HMT-U1/120
	with VA skirting, left

REMACLEAN HM-U2 Belt Cleaning System

FEATURES
- Excellent cleaning performance
- Especially selected hard metals ensure long service life
- The continuous hard metal scraper unit can be easily installed and adjusted without special knowledge
- The highly abrasion resistant REMATHAN polyurethane element prevents material build-up and caking and absorbs vibrations
- Modular construction consisting of support tube, support tube extension, spindle assembly with rubber spring element
- Uniform and optimum pressure against conveyor belt easily adjustable
- Fixation of the spindle assembly outside of the conveyor belt possible
- Declining outer hard metal blades prevent damage to the belt edges
- Suitable for shuttle belt conveyors

REMACLEAN HM-U2

Ref. No.	Belt width mm
578 9278	500
578 9285	600/650
578 9292	750/800
578 0105	900
578 0112	1 000/1 050

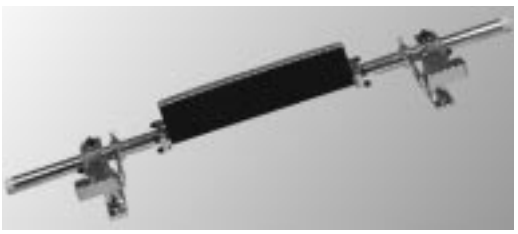

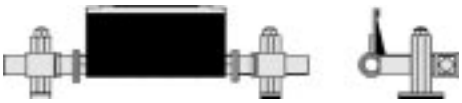

Accessories

Ref. No.	Description
578 9508	Reversing stop for belt width 400 - 650
578 9515	Reversing stop for belt width 750 - 1 050
578 9845	Off-set plate (up to belt width 800)
	Set: 2 pcs with fastening elements for belt width from 400 to 800

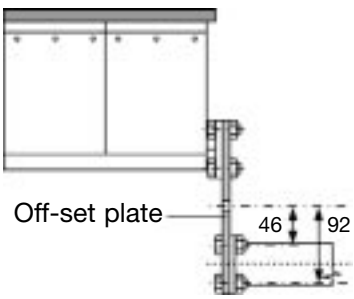

Spare parts

Ref. No.	Description
578 9412	Metal carbide scraper HMT-U2
	incl. REMATHAN skirting BB 500
578 9429	Metal carbide scraper HMT-U2
	incl. REMATHAN skirting BB 600/650
578 9436	Metal carbide scraper HMT-U2
	incl. REMATHAN skirting BB 750/800

REMACLEAN HM-F2 Belt Cleaning System

FEATURES
- Excellent cleaning is provided by precise adjustment of metal carbide scrapers (individual bearings) to the pulley surface
- Especially selected durable metal carbides ensure long service life
- Mounting of the scraper below the pulley axis
- Open design of the metal carbide scrapers and torsion elements eliminates material build-up
- Can easily be mounted and adjusted without special knowledge
- Scraper pressure is easily adjustable to allow constant and optimum pressure to the belt surface
- Installation is also possible outside the conveyor construction
- Type HM-F2/HR for operating temperatures up to 120 °C (248 °F)
- Type HM-F2/VA resistant against corrosive operating conditions

REMACLEAN HM-F2

Ref. No.	Belt width mm
578 3009	400
578 3016	500
578 3023	600/650
578 3030	750/800
578 3047	900
578 3054	1 000/1 050
578 1001	1 200
578 1018	1 350/1 400

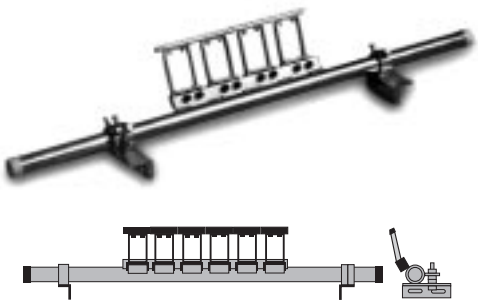

REMACLEAN HM-F2/HR

Ref. No.	Belt width mm
578 1214	400
578 1221	500
578 1238	600/650
578 1245	750/800
578 1252	900
578 1269	1 000/1 050
578 1276	1 200
578 1283	1 350/1 400

REMACLEAN HM-F2/VA

Ref. No.	Belt width mm
578 0167	400
578 0174	500
578 0181	600/650
578 0198	750/800
578 0208	900
578 0215	1 000/1 050

Spare Parts for REMACLEAN HM-F2

Ref. No.	Description
578 3250	Metal carbide scraper segment HMT-F2/120
578 3267	Metal carbide scraper segment HMT-F2/120-R
578 3274	Metal carbide scraper segment HMT-F2/120-L
578 0435	Metal carbide scraper segment HMT-F2/240
578 0442	Metal carbide scraper segment HMT-F2/240-R
578 0459	Metal carbide scraper segment HMT-F2/240-L

REMACLEAN Belt Cleaning Brushes

FEATURES
- Optimum belt cleaning performance
- High flexibility prevents damage to the belt
- Outstanding self-cleaning effect

FIELDS OF APPLICATION
- Fine and powdery slightly sticky material such as glass dust, fine ore, FGD gypsum and slag
- Installation after primary scraper (e.g. KWA)

REMACLEAN Belt Cleaning Brush
Complete with clutch drive

Technical characteristics
Hardness of rubber bristles 50 ± 5 Shore A DIN 53505
Metal body with shaft and clutch
Self-aligning twin bearings
Bearing housing
Mounting brackets
Electro-motor 230V/ 380V/ (500V or other types on request)

Ref. No.	for belt width mm	Technical characteristics
578 5007	400	0,55 kW ca. 900 U/min.
578 5014	500	0,55 kW ca. 900 U/min.
578 5021	650	0,75 kW ca. 900 U/min.
578 5038	800	0,75 kW ca. 900 U/min.
578 5045	1 000	0,75 kW ca. 900 U/min.
578 5052	1 200	1,1 kW ca. 900 U/min.
578 5069	1 400	1,1 kW ca. 900 U/min.
578 5076	1 600	1,1 kW ca. 900 U/min.
578 5083	1 800	1,5 kW ca. 900 U/min.
578 5090	2 000	1,5 kW ca. 900 U/min.

“V”- Quality belt cleaning brushes and motors for underground available on request

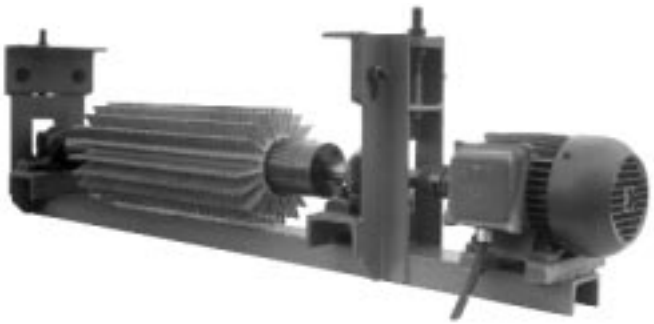

SPARE PARTS FOR REMACLEAN Belt Cleaning Brushes

SPARE CLEANING BRUSH
on metal body-without shaft

Ref. No.	for belt width mm
578 4400	400
578 4417	500
578 4424	650
578 4431	800
578 4448	1 000
578 4455	1 200
578 4462	1 400
578 4479	1 600
578 4486	1 800
578 4493	2 000

REMACLEAN Belt Cleaning Worm

FIELDS OF APPLICATION
Heavy and very sticky material

REMACLEAN Belt Cleaning Worm
complete with clutch drive

Technical characteristics
Hardness of rubber 60 ± 5 Shore A DIN 53505
Metal body with shaft and clutch
Self-aligning twin bearings
Bearing housing
Mounting brackets
Electro-motor 230V/ 380V/ (500V or other types on request)

Ref. No.	for belt width mm	Technical characteristics
578 6006	400	1,5 kW, ca. 900 U/min.
578 6013	500	1,5 kW, ca. 900 U/min.
578 6020	650	2,2 kW, ca. 900 U/min.
578 6037	800	2,2 kW, ca. 900 U/min.
578 6044	1 000	3,0 kW, ca. 900 U/min.
578 6051	1 200	4,0 kW, ca. 900 U/min.
578 6068	1 400	4,0 kW, ca. 900 U/min.

Spare Cleaning Worm
on metal body-with shaft

Ref. No.	for belt width mm
578 6202	400
578 6219	500
578 6226	650
578 6233	800
578 6240	1 000
578 6257	1 200
578 6264	1 400

Spare Cleaning Worm
on metal body-without shaft

Ref. No.	for belt width mm
578 6305	400
578 6312	500
578 6329	650
578 6336	800
578 6343	1 000
578 6350	1 200
578 6367	1 400

SPARE RUBBER SEGMENTS for Belt Cleaning Worm

Ref. No.	Description
527 4903	Rubber segment for belt cleaning worm

Please advise left hand segment or right hand segment when ordering.